B.E.G. LUXOMAT® net



Indoor 180-KNXs-ST covering not included Set 93524-92139

KNX PIR Wall-Mounted Motion Detector (Standard) with 180° detection angle and a range of up to 10 m (150 m²)

Order data

Designation	Colour	Art.No
Indoor 180-KNXs-ST covering not included	-	93524
Frame IP54 Indoor 180	pure white	92139

Technical data

Voltage:	via KNX BUS
Dimensions:	**(covering not included) 70 x 70 x 61 mm + 87 x 87 mm (92139)**
Typ. power input:	12 mA
Detection area:	horizontal 180° (Wall mounting)
Range:	max. 10 m across max. 3 m towards
Monitored area (tangential movement):	150 m² / 1.1 m mounting height
Mounting height min./max./recommended:	1 m / 2.2 m / 1.1 m
Degree / class of protection:	**IP20 / Class III + IP54 (92139)**
Impact strength:	IK05
Ambient temperature:	-25 °C to +55 °C
Housing:	polycarbonate, UV-resistant
Material color:	**pure white mat, similar to RAL9010 (92139)**
Number of light sensors:	1
Number of PIR sensors:	1
KNX TP 256:	Yes
KNX Secure:	Yes
Orientation light:	5 – 100 % / OFF / 1 min – 255 min
Night light:	5 – 100 %
Brightness set value:	5 – 2000 Lux

Product information

Set : Indoor 180-KNXs-ST covering not included + Frame IP54 Indoor 180 pure white mat, similar to RAL9010

KNX occupancy detector with integrated KNX bus coupler, especially for installation in walls

KNX Secure ready

Parameterisation from ETS 5 for integration into KNX systems

Individual adaption of the PIR sensor sensitivity

Mixed light measurement using internal and remote (optional) light sensors

Intelligent semi-automatic mode, occupancy-independent regulating mode (photoelectric switch), full automatic mode

1 x Light (for regulating or switching), 1 x slave output, 3 separate HVAC-blocs

Regulation of up to three lighting groups using offset (external influence possible)

Short presence, self-adjusting follow-up time, corridor function

Various locking functions

Soft-start

Recall of light scenes

Deactivatable status indicators

The product database for import into the ETS database can be downloaded from the B.E.G. homepage.

Detection area can be extended thanks to master-slave-mode

Measured light value is communicated to the bus

Adaption of dimming curve

Bidirectionally remote control-capable with the IR adapter and the B.E.G. smartphone app

PIN code

IR remote control-capable via IR remote control (optionally)

Programming button (phys. address) can be operated via remote control

HVAC mode (0=automatic, 1=comfort, 2=stand-by, 3=economy, 4=antifreeze/heat protection)

Manual influence via external KNX push buttons possible

Function control (heartbeat, cyclical sending)

Forced switch-off

Intelligent central-off function

Premonition of switch-off

Burn-in function for fluorescent lamps selectable from 1h till 100h

Behaviour upon bus voltage return definable at choice

Variable safety pause after switching off the lights

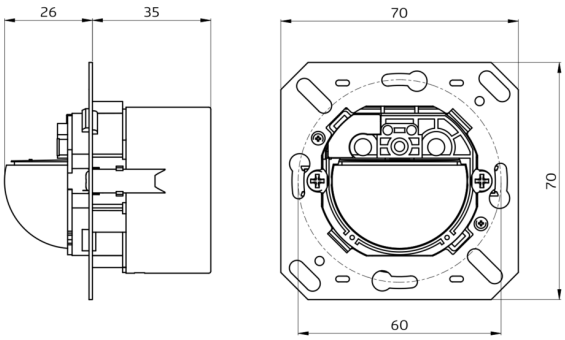
26
35
70
70
60

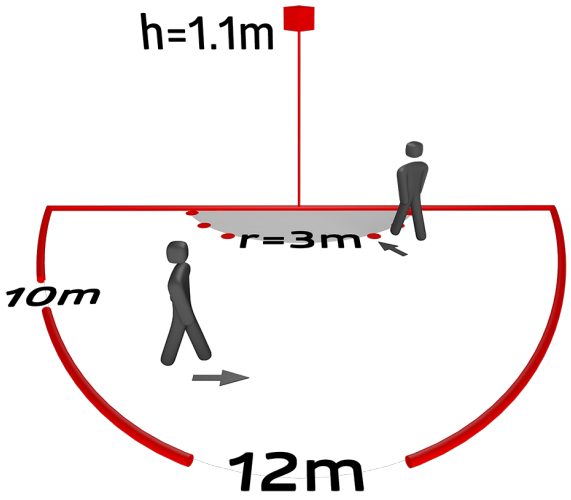
h=1.1m
r=3m
10m
12m

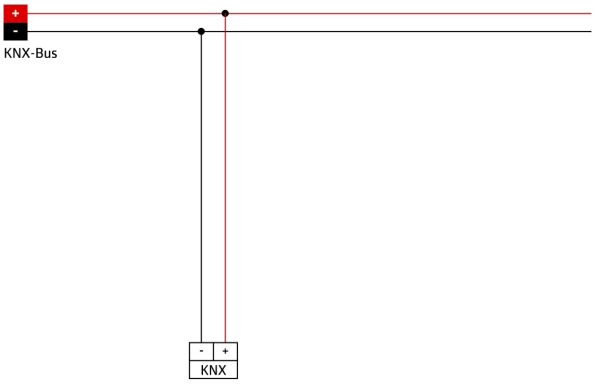
+
-
KNX-Bus
-
+
KNX

Set items

To receive the bundle according to the technical specification, please order the items listed.



Indoor 180-KNXs-ST covering not included
Art.No: 93524

Voltage: via KNX BUS
Dimensions: (covering not included) 70 x 70 x 61 mm
Typ. power input: 12 mA



Frame IP54 Indoor 180
Art.No: 92139

Dimensions: 87 x 87 mm
Degree / class of protection: IP54
Housing: polycarbonate, UV-resistant