B.E.G. LUXOMAT®



IR-CdS-T

Prod.No. 92368 EAN: 4007529923687

Infrared remote control for conveniently setting or changing parameters

Comes complete with a wall bracket

The functions of the remote control are described with the respective device

Order data

Designation	Colour	Art.No
IR-CdS-T	-	92368

Accessories

Designation	Colour	Art.No
Wall holder IR-RC	white	92100

Technical data

Battery:	3.0 V Lithium CR2032 (inclusive)
Dimensions:	80 x 60 x 8 mm
Material color:	-
Transmit range:	**clouded/dark:** max. 5 to 6 m **sunshine:** max. 2 to 3 m

Product information

Infrared remote control for conveniently setting or changing parameters

Comes complete with a wall bracket

Easy programming of the CdS-T-SM photo electric switch an the AL5-RC-plus next in combination with the CdS-T-SM photo electric switch

The functions of the remote control are described with the respective device

Suitable for: 92367, ...

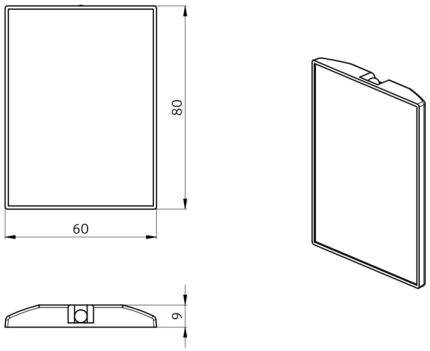
80
60
9

Accessories



Wall holder IR-RC
Art.No: 92100

Dimensions: 63 x 30 x 19 mm
Housing: polycarbonate, UV-resistant
Material color: white