B.E.G. LUXOMAT®

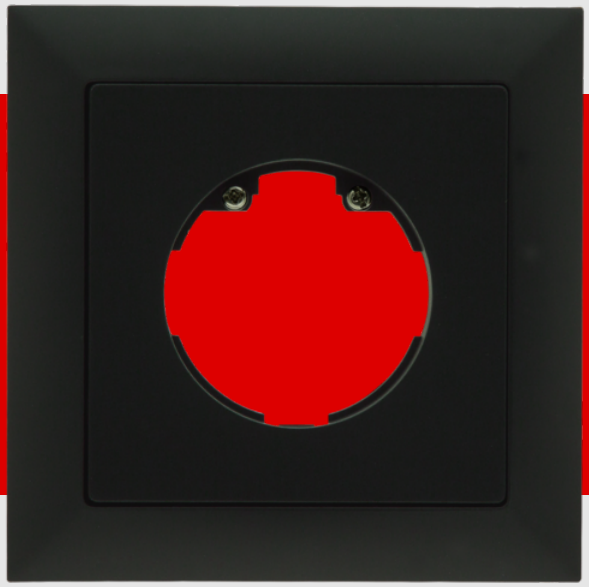

Frame IP20 Indoor 140-L

Prod.No. 94341 EAN: 4007529943418

Frame IP20 for the automatic wall switch Indoor 140-L

For combination with a sensor insert

Please order the sensor insert for the wall switch separately

Order data

Designation	Colour	Art.No
Frame IP20 Indoor 140-L	anthracite	94341

Technical data

Dimensions:	88 x 88 mm, Inside dimension: 63 x 63 mm
Degree / class of protection:	IP20 / Class II
Material color:	anthracite mat, similar to RAL7021

Product information

Frame IP20 for the automatic wall switch Indoor 140-L

For combination with a sensor insert

Please order the sensor insert for the wall switch separately

Consisting of a designer frame, central plate including fixing screws and two crescent-shaped touch surfaces

Suitable for: 93806, ...

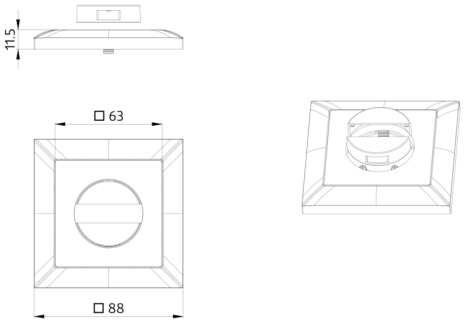
11.5
63
88