B.E.G. LUXOMAT®



Cover ring PD2N FM

Prod.No. 93762 EAN: 4007529937622

Cover ring for colour matching

For usability/compatibility of the accessories please refer to the descriptions of the main articles

Order data

Designation	Colour	Art.No
Cover ring PD2N FM	traffic white	93762

Accessories

Designation	Colour	Art.No
Adapter ring PD2N FM		93089

Technical data

Dimensions:	Ø 106 x 20 mm
Impact strength:	IK05
Housing:	polycarbonate, UV-resistant
Material color:	traffic white mat, similar to RAL9016

Product information

Cover ring for colour matching

For usability/compatibility of the accessories please refer to the descriptions of the main articles

Suitable for: 93240, 93351, 93368, 93452, 93453, 93455, 93476, 93477, 93511, 93513, 93534, 93544, 93580, ...

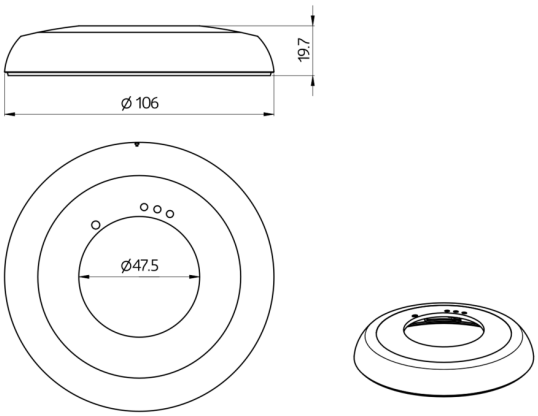
19.7
Ø 106
Ø47.5

Accessories

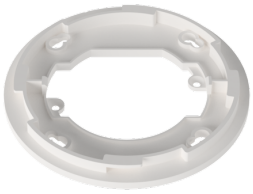

Adapter ring PD2N FM
Art.No: 93089

Dimensions: Ø 101 x 10 mm
Housing: polycarbonate, UV-resistant
Material color: white mat, similar to RAL9010