B.E.G. LUXOMAT®

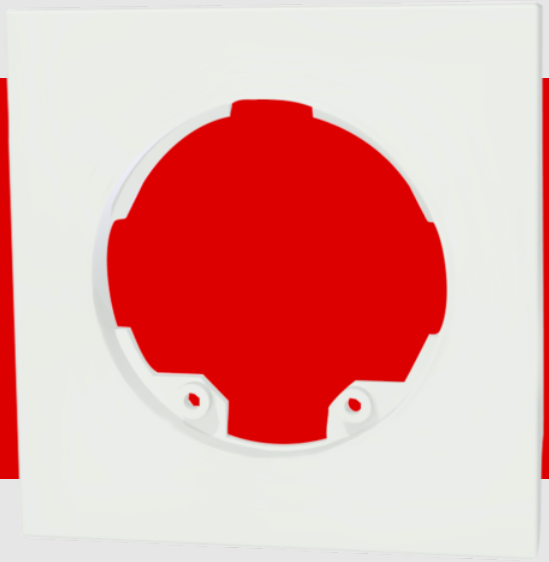

Central plate Indoor 140 63x63

Prod.No. 94345 EAN: 4007529943456

Central plate for automatic wall switch Indoor 140-L

For combination with a sensor insert

Please order the sensor insert for the wall switch separately

Order data

Designation	Colour	Art.No
Central plate Indoor 140 63x63	pure white	94345

Technical data

Dimensions:	63 x 63 mm
Housing:	polycarbonate, UV-resistant
Material color:	pure white glossy, similar to RAL9010

Product information

Central plate for automatic wall switch Indoor 140-L

For combination with a sensor insert

Please order the sensor insert for the wall switch separately

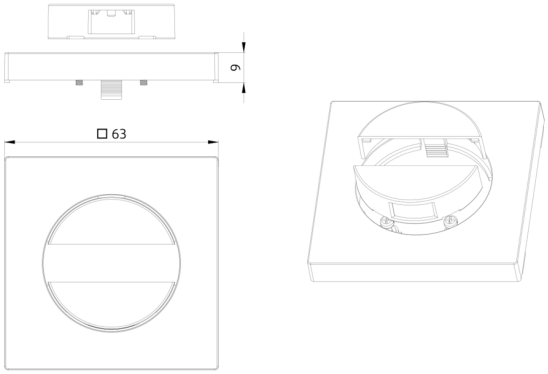
9
□63