B.E.G. LUXOMAT®

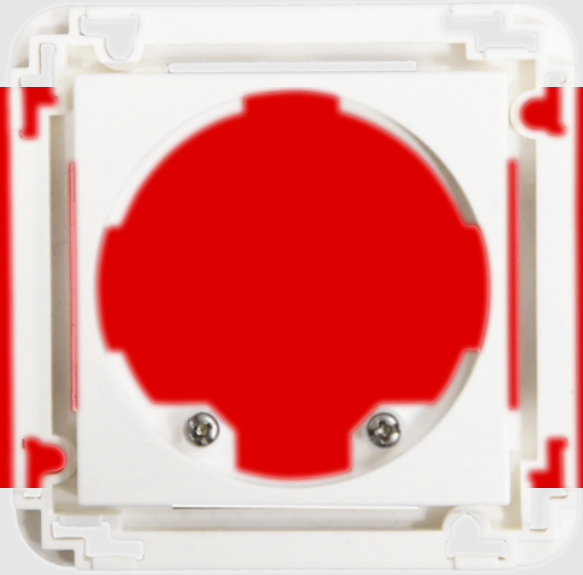

Central plate Indoor 140 45x45

Prod.No. 39075 EAN: 4007529390755

Central plate for automatic wall switch Indoor 140-L

For combination with a sensor insert

Please order the sensor insert for the wall switch separately

Order data

Designation	Colour	Art.No
Central plate Indoor 140 45x45	oyster white	39075

Technical data

Dimensions:	45 x 45 mm
Degree / class of protection:	IP20 / Class II
Material color:	oyster white mat, similar to RAL1013

Product information

Central plate for automatic wall switch Indoor 140-L

For combination with a sensor insert

Please order the sensor insert for the wall switch separately

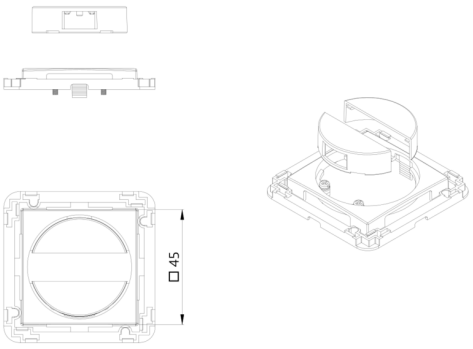
□45